X125T 125cc TaG

by MX

INFORMATIONS TECHNIQUES	*TECHNICAL INFORMATION*

A	CARACTÉRISTIQUES	*A*	*CHARACTERISTICS*

			Tolérances / remarques *Tolerances & remarks*
Cylindre	***Cylinder***		
Volume du cylindre	*Volume of cylinder*	**124.91 cm³**	<125cm³
Alésage d'origine	*Original bore*	**53.90 mm**	--
Alésage théorique maximum	*Theoritical maximum bore*	**54.07 mm**	--
Course d'origine	*Original Stroke*	**54.40 mm**	--
Nombre de canaux de transfert, cylindre/carter	*Number of transfer ducts, cylinder/sump*	**5/3**	--
Nombre de lumières / canaux d'échappement	*Number of exhaust ports / ducts*	**3**	--
Volume de la chambre de combustion	*Volume of the combustion chamber*	**11.0 cm³**	Mini
	Squish	**.84 mm**	
	Cylinder Development - CC	**180**	
Vilebrequin	***Crankshaft***		
Nombre de paliers	*Number of bearings*	**2**	--
Diamètre des paliers	*Diameter of bearings*	**25**	±0.1mm
Poids minimum du vilebrequin	*Minimum weight of crankshaft*	**2120 g**	minimum
Ensemble des pieces representées sur la photo page 7	*All parts represented on page 7 photo*		
Arbre d'équilibrage	***Balance shaft***		
Poids minimum de l'arbre d'équilibrage	*Minimum weight of balance shaft*	**399 g**	minimum
Pourcentage d'Equilibrage	*Percentage of balancing*	**25%**	minimum
Bielle	***Connecting rod***		
Longueur (entre-axe) de la bielle	*Connecting rod centreline*	**104 mm**	±0.2mm
Diamètre de la tête de bielle	*Diameter of big end*	**26 mm**	±0.05mm
Diamètre du pied de bielle	*Diameter of small end*	**19 mm**	±0.05mm
Poids minimum de la bielle	*Min. weight of the connecting rod*	**99 g**	minimum

Piston	***Piston***		
Nombre de ségments du piston	*Number of piston rings*	**1**	
Poids minimum du piston nu	*Min. weight of the bare piston*	**99 g**	minimum
Axe du piston	***Gudgeon pin***		
Poids minimum	*Minimum weight*	**30 g**	Minimum
Embrayage	***Clutch***		
Poids minimum	*Minimum weight*	**839 g**	minimum
De l'ensemble des pièces représentées dans le dessin technique page 14 de la Fiche d'Homologation KF4	*Of all the parts represented on the page 14 technical drawing from KF4 Homologation Form*		

B	ANGLES D'OUVERTURE	*B*	*OPENING ANGLES*
De l'admission (transferts principaux)	*Of the inlet (main transfer ports)*	**127-°**	**±2°**
De l'admission (transferts secondaires, pour moteur à 5 transferts)	*Of the inlet (secondary transfer ports, for 5 transfer ducts engine)*	**125°**	**±2°**
De l'échappement	*Of the exhaust*	**180°**	maximum
Des boosters	*Of the boosters*	**172°**	maximum

C	MATÉRIAU	*C*	*MATERIAL*
Culasse	*Cylinder head*		**AL-SI**
Cylindre	*Cylinder*		**AL-SI**
Paroi du cylindre	*Cylinder wall*		**CAST IRON**
Carter	*Sump*		**AL-SI**
Vilebrequin	*Crankshaft*		**STEEL**
Bielle	*Connecting rod*		**STEEL**
Piston	*Piston*		**AL-SI**

D	PHOTOS, DESSINS & GRAPHIQUES	*D*	*PHOTOS, DRAWINGS & GRAPHS*

D.1 CYLINDRE / *CYLINDER UNIT*

VOLUME DES CANAUX DE TRANSFERT	*TRANSFER DUCTS VOLUME*	
Position des transferts sur cylindre 5 transferts *Transfer position on 5-transfer cylinder*	TRANSFERT N° *TRANSFER No.*	*VOLUME* *en cm³ / in cc* *+/- 5 %*
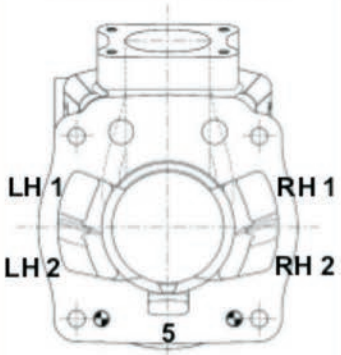	Transfert N° 1 LH *Transfer No. 1 LH*	*32.1*
	Transfert N° 2 LH *Transfer No. 2 LH*	
	Transfert N° 3 ou 5 *Transfer No. 3 or 5*	*5.0 +/- 8 %*
	Transfert N° 2 RH *Transfer No. 2 HR*	*32.1*
	Transfert N° 1 RH *Transfer No. 1 HR*	

DESSIN DU PIED DU CYLINDRE sans dimensions	*DRAWING OF THE CYLINDER BASE without dimensions*

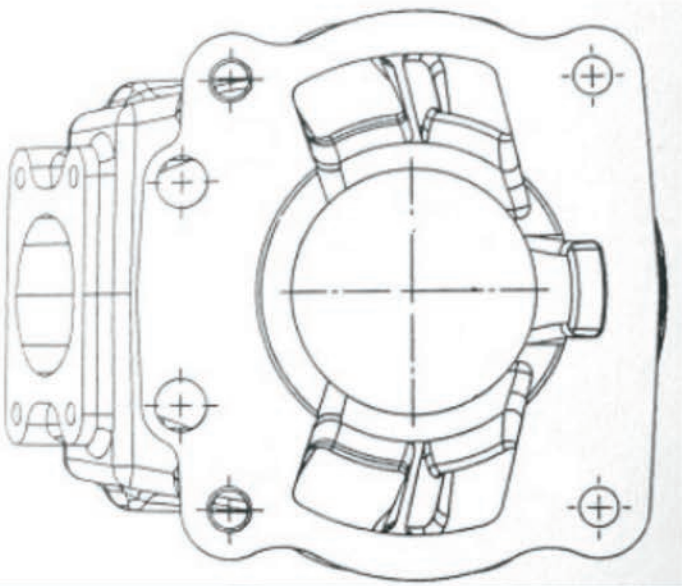

Uniquement controlé avec gabarits / *Control with templates only*

LONGUEUR DU CANAL D'ÉCHAPPEMENT	*EXHAUST DUCT LENGTH*

	ANGLE α en / *in* °	**L minimum en / *in* mm**
	68 +/-1°	56.2 mm

La mesure L min. sera le résultat de la valeur relevée sur le moteur de référence moins 5 mm.
The L min. dimension will be the result of the value taken on the reference engine minus 5 mm.

Dessin Technique N°13	Technical Drawing No.13

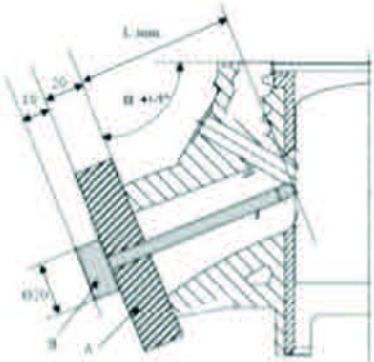

- A : Guide-centreur se centrant par rapport au canal d'échappement par les vis de fixation du collecteur d'échappement, ayant une épaisseur totale de 20 +/- 0,05 mm et étant percé en son centre d'un trou de diamètre 5 mm, alésé H7.
- *A: Centring guide centred in relation to the exhaust duct by the exhaust manifold fixation screws, with a total thickness of 20 +/- 0.05 mm and being drilled in its centre by a hole with a 5 mm diameter, H7 bore.*
- B : Jauge de contrôle composée d'une tige de diamètre 5g6 ayant à son extrémité un rayon de 2,5 mm et d'une longueur = L min + 20+10.
- *B: Control gauge composed of a shaft with a 5g6 diameter having a 2.5 mm radius at its end and a length = L min + 20+10.*

PROFIL INTERIEUR DE SORTIE DU CANAL D'ÉCHAPPEMENT	*INTERNAL PROFILE OF THE EXHAUST DUCT*

Gabarits des dimensions intérieures du canal d'échappement : plan de joint du collecteur.
Templates of the internal dimensions of the exhaust duct: gasket plane of the manifold.

DESSIN VUE DE FACE – avec dimensions / *FRONT VIEW DRAWING – with dimensions*

Gabarit minimum / *Minimum template*	Gabarit maximum / *Maximum template*
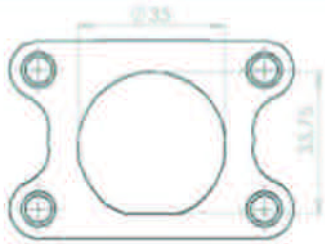	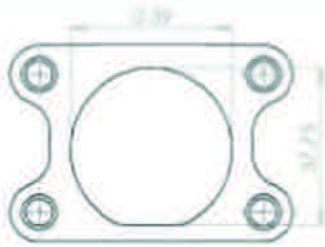

- Gabarit maximum : profil intérieur du plan de joint du collecteur du cylindre d'origine plus 1 mm
- *Maximum template: internal profile of the gasket plane of the manifold of the original cylinder plus 1 mm*
- Gabarit minimum : profil intérieur du plan de joint du collecteur du cylindre d'origine moins 1 mm
- *Minimum template: internal profile of the gasket plane of the manifold of the original cylinder minus 1 mm*
- Épaisseur / *Thickness*: 5 +/- 0,05 mm

Alum. Exhaust Spacer - Max 5mm

D.2 BIELLE, CARTERS, VILEBREQUIN & PISTON / *CONROD, CRANKCASE, CRANKSHAFT & PISTON*	
PHOTO DE L'EMBIELLAGE *PHOTO OF THE CRANKSHAFT & CONROD*	PHOTO DE LA BIELLE *PHOTO OF THE CONROD*
	
DESSIN DE L'ENSEMBLE VILEBREQUIN - BIELLE (DIMENSIONS avec tolérances, largeurs pied & tête de bielle, largeur & diamètre des contrepoids)	*DRAWING OF THE CRANKSHAFT - CON ROD UNIT (DIMENSIONS incl. tolerances, big & small ends thickness, crank mass thickness & diameter)*
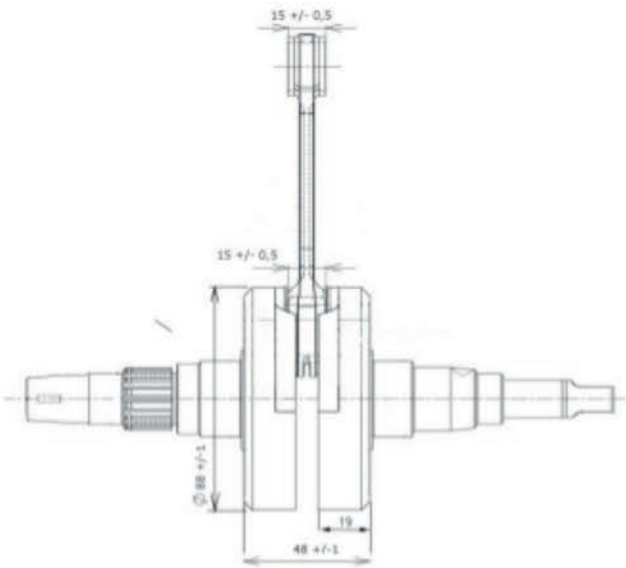	

SILENCIEUX D' ASPIRATION	INLET SILENCER

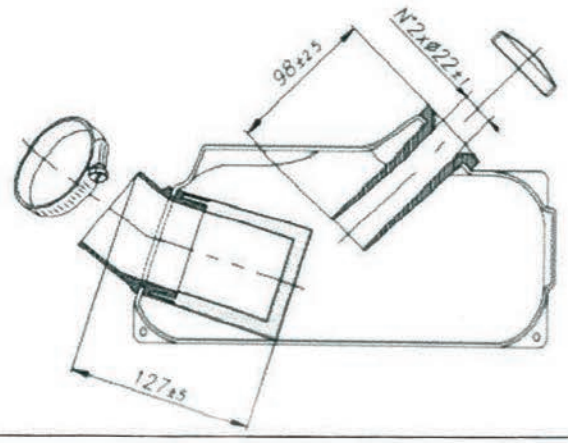

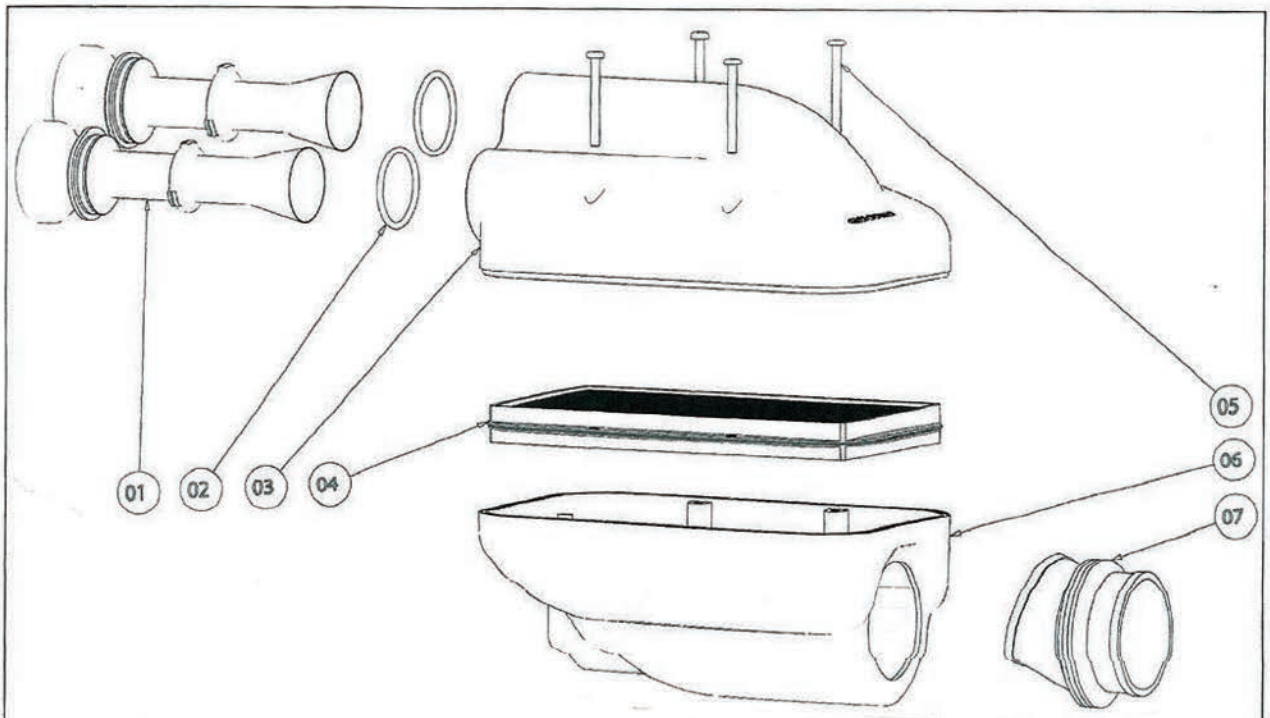

N°	DESIGNATION	*DESIGNATION*	**Reference catalogue** ***Catalogue reference number***
01	Tubes d'Aspiration Dia, 23mm	Suction tubes Dia 23mm	KE065
02	O-Ring	O-Ring	KE067
03	Corps filter superieur	Upper body filter	ZZKE006
04	Filtre	Filter	KE068
05	Vis M5	Screw M5	KVP05050S
06	Corps filter cote moteur	Engine side body filter	ZZKE007
07	Raccord en caoutchouc	Rubber Connector	K070

The filter element no.3 can be rotated 180°

Note: All current and previous CIK approved inlet silencers or air boxes with 23 mm diameter suction tubes are approved.

D.4 CLAPETS & EMBRAYAGE / *REED VALVE & CLUTCH*

DESSIN DE LA BOÎTE À CLAPETS (DIMENSIONS avec **tolérances**)	*DRAWING OF THE REED VALVE (DIMENSIONS incl. **tolerances**)*

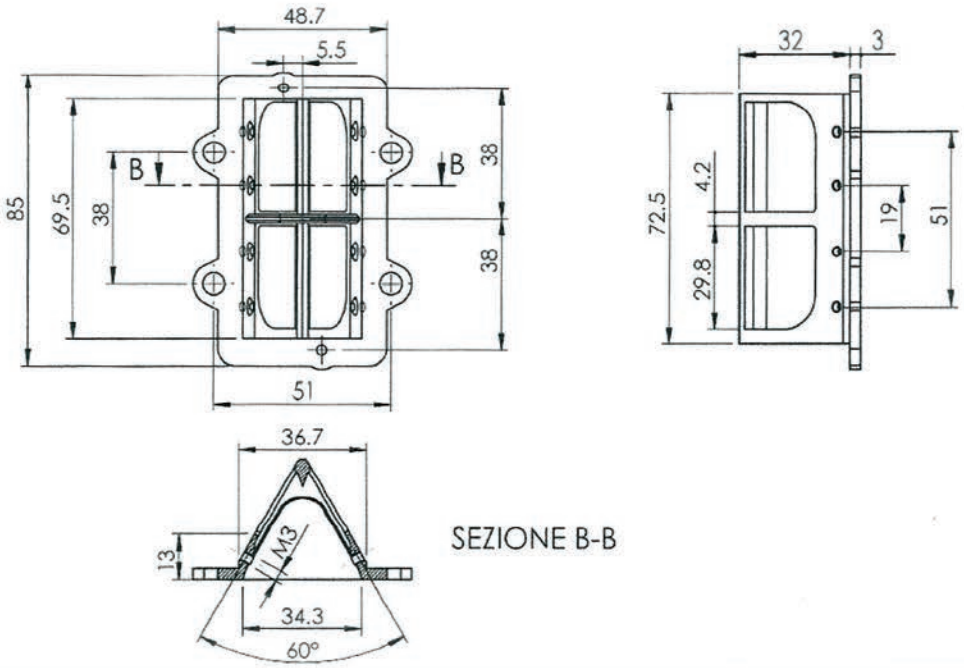

Carbeurator Notes: Senior = Tillotson HL-334A / HL-334AB
Master/Heavy = Tillotson HW-27A or Tryton 27HB

No Modifications allowed. Specifications included in drawing supplied by manufacturer. All parts to be as supplied with the following exceptions:

1. Plastic cap may be Tillotson or IBEA equivalent - no modifications allowed.
2. The external brass fitting on the throttle linkage may be changed but the throttle shaft, butterfly and butterfly screw must be stock as supplied.
3. Only the top cover screws may be replaced all other fasteners must be as supplied.
4. The only Induction Silencer adapters allowed are by specification in manufacturer's drawing.
5. A washer may be welded onto the original "Low jet" to allow for easier adjustment.

D.3 L'ARBRE D'ÉQUILIBRAGE, DE LA POMPE À EAU / *BALANCE SHAFT & WATER PUMP*

PHOTO DE L'ARBRE D'ÉQUILIBRAGE *PHOTO OF THE BALANCE SHAFT*	
	
DESSIN DE L'ARBRE D'ÉQUILIBRAGE (DIMENSIONS avec tolérances)	*DRAWING OF THE BALANCE SHAFT* *(DIMENSIONS incl. tolerances)*

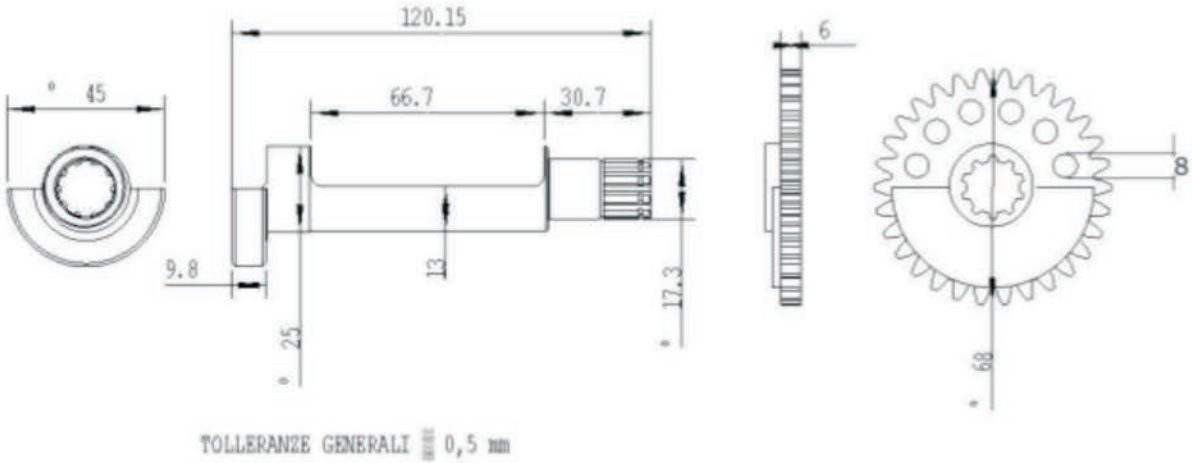

DESCRIPTIONS TECHNIQUES DE L'ÉCHAPPEMENT	*TECHNICAL DESCRIPTIONS OF THE EXHAUST*

Poids en g	*Weight in g*	**1990**	*Minimum*
Volume in cm^3	*Volume in cc*	**4700**	*+/-5 %*

DESSIN TECHNIQUE	***TECHNICAL DRAWING***
Il doit contenir toutes les informations permettant de construire cet échappement.	*It must include all the information necessary to build this exhaust.*

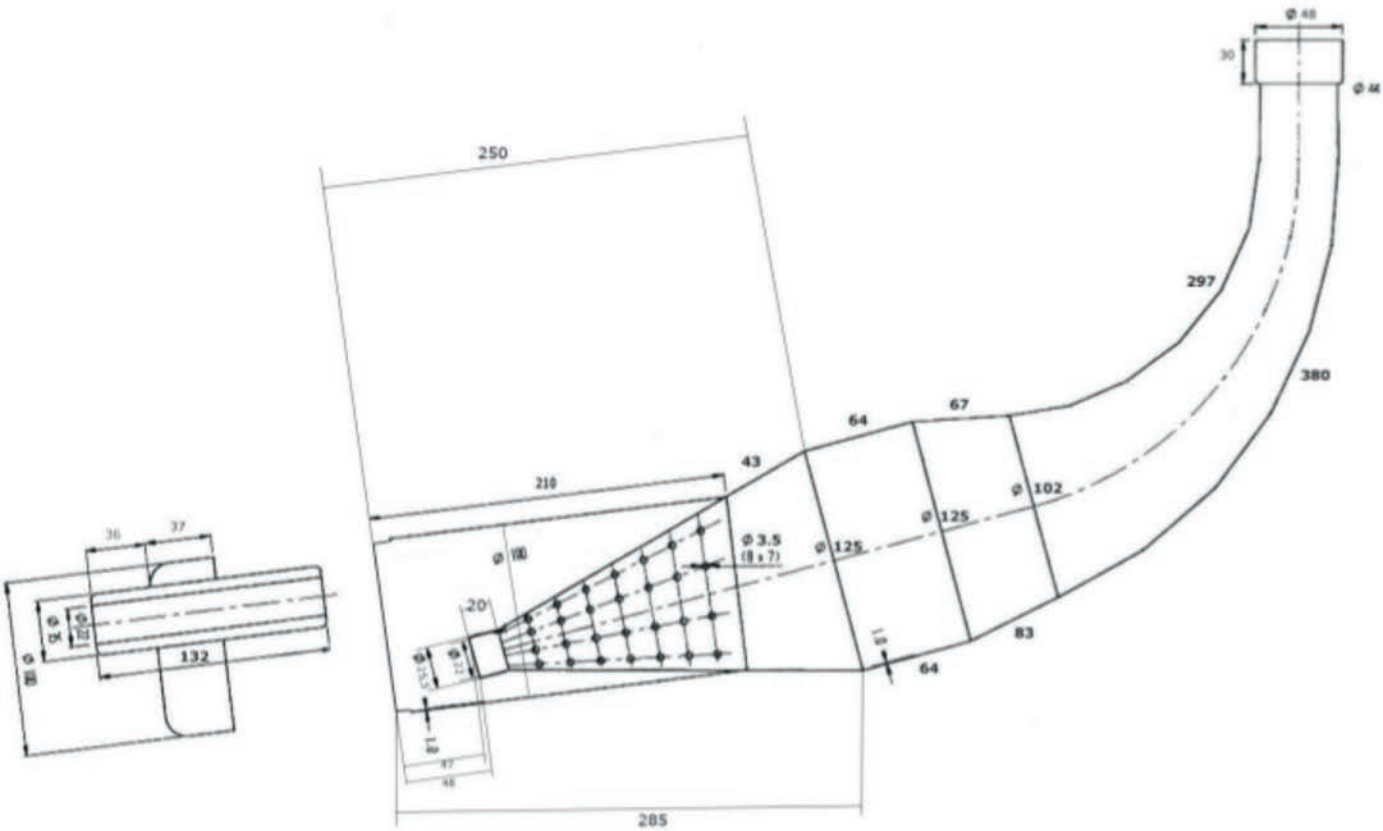

D.5 SYSTEME D'ÉCHAPPEMENT / *EXHAUST SYSTEM*
PHOTO DE L'ÉCHAPPEMENT
PHOTO OF THE EXHAUST

Carburetor

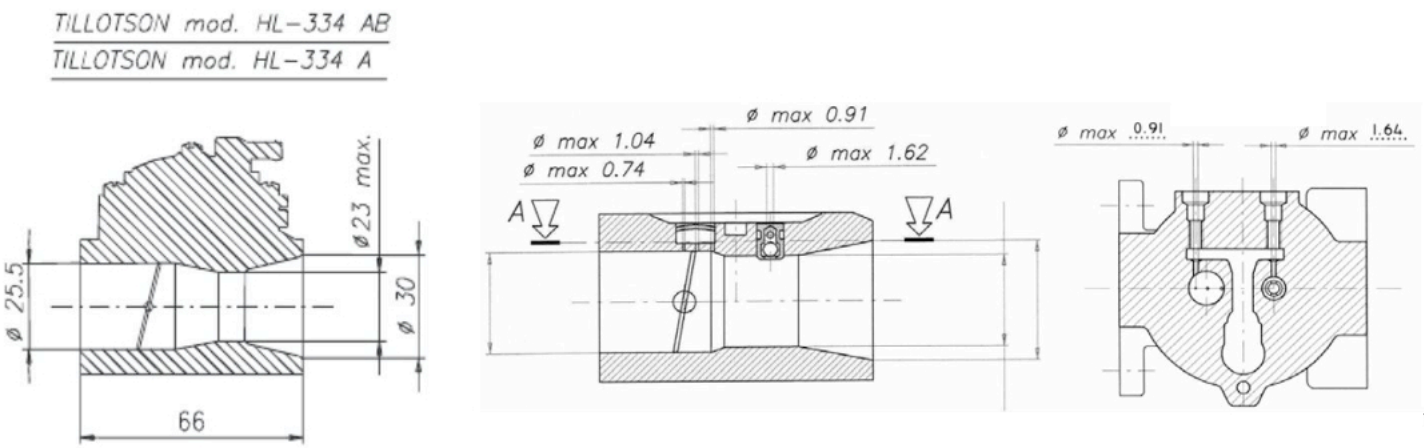
TILLOTSON mod. HL-334 AB
TILLOTSON mod. HL-334 A
ø 23 max.
ø 25.5
ø 30
66
ø max 0.91
ø max 1.04
ø max 0.74
ø max 1.62
A
A
ø max 0.91
ø max 1.64

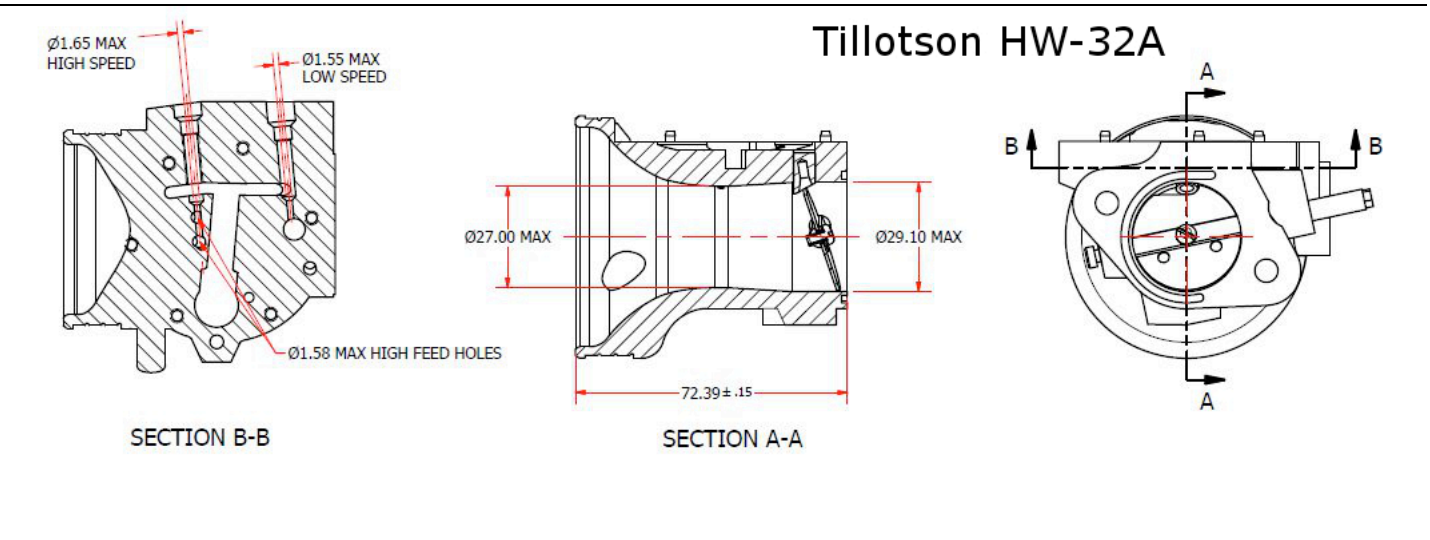
Tillotson HW-32A
Ø1.65 MAX
HIGH SPEED
Ø1.55 MAX
LOW SPEED
Ø1.58 MAX HIGH FEED HOLES
SECTION B-B
Ø27.00 MAX
Ø29.10 MAX
72.39±.15
SECTION A-A
A
B
B
A

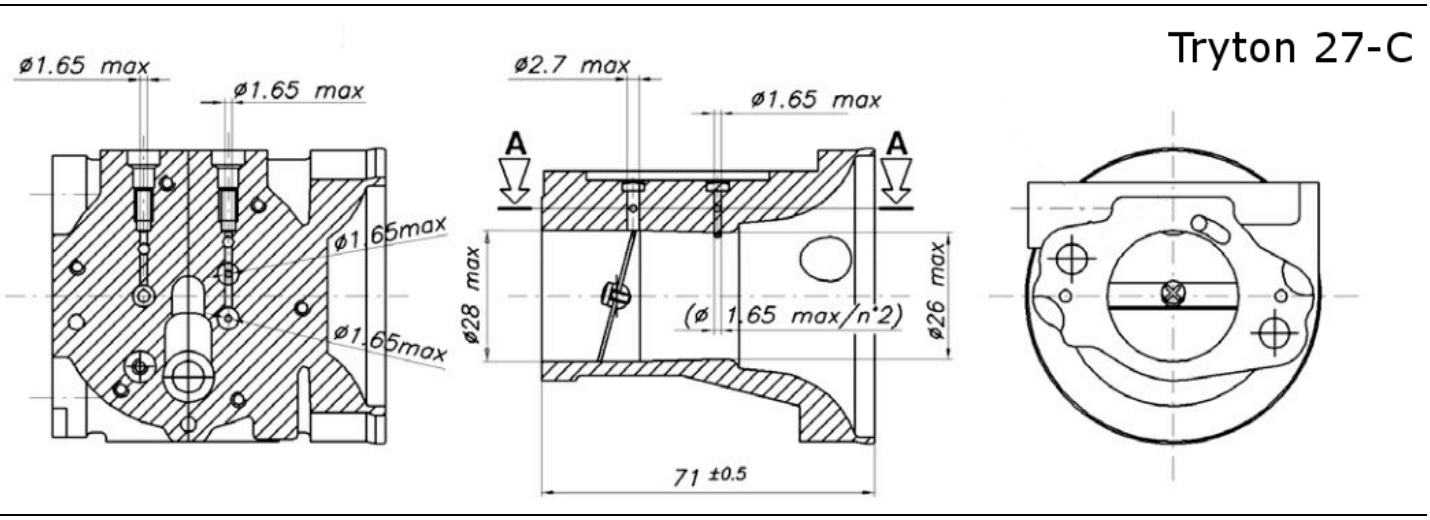
Tryton 27-C
ø1.65 max
ø1.65 max
ø1.65max
ø1.65max
ø2.7 max
ø1.65 max
A
A
ø28 max
(ø 1.65 max/n°2)
ø26 max
71 ±0.5

X125T 125cc TaG

1.	Displacement	124.91 cm3 (Max. 125 cm3), Bore 53.90mm (Max 54.07mm), Stroke 54.40mm.
2.	Cylinder	Cylinder is of aluminium with iron liner. All ports must be of intended design, conforming to drawings supplied by manufacturer. No modification or grinding permitted.
3.	Cylinder Head	Cylinder head is aluminium and shall conform to drawing supplied by manufacturer. No modification allowed. Cylinder head volume is measured using the standard procedure except for the following notes. 1. The CIK cc tool is used(CIK Technical Drawing 6) 2. If using the LAD tool 11.0cc Min
4.	Crankcase	Crankcase is aluminium and shall conform to drawing supplied by manufacturer.
5.	Crankshaft and Conrod	Crankshaft and conrod are of steel and shall be of original as supplied by original manufacturer. Parts must conform to drawings supplied by manufacturer. No modification allowed.
6.	Piston	Piston is aluminium, supplied by original manufacturer with manufacture's marking on dome and conforms to drawing supplied by manufacturer. No modification allowed.
7.	Piston Ring	Must be magnetic material.
8.	Clutch	Dry centrifugal in design, as supplied by original manufacturer as specified in manufacturer's drawings. No modification allowed.
9.	Carburetor	Senior -Tillotson HL-334A / HL-334AB, Master/Heavy - Tillotson HW-27A or Tryton 27HB No modification allowed. Specifications included in drawing supplied by manufacturer. All parts to be as supplied with the following exceptions: 1. Plastic cap may be Tillotson or IBEA equivalent no modifications allowed 2. The external brass fitting on the throttle linkage may be changed but the throttle shaft, butterfly and butterfly screw must be stock as supplied. 3. Only the top cover screws may be replaced all other fasteners must be as supplied 4. The only Induction Silencer adapters allowed are by

		specification in manufacturer's drawing. 5. A washer may be welded onto the original “Low jet” to allow for easier adjustment.
10.	Inlet Silencer	The induction silencer must comply with the dimensions shown in the drawing. New CIK homologated airbox allowed.
11.	Spark Plug	Spark Plug make is free. The spark plug must retain the original washer and the body of the plu (electrodes not included). When tightened on the cylinder head, must not extend beyond the upper part of the dome and combustion chamber. *The Spark Plug Boot is a NON-TECH item
12.	Ignition	PVL ignition at 15.5 max. RPM (with built in hourmeter). The orginal un-modified key must be installed in the keyway for the ignition. Ignition mounting holes must be as supplied.
13.	Battery	12V battery - not supplied with engine, open manufacturer.
14.	Muffler/Header	Must be supplied by original manufacturer - No modifications allowed. Junior header as shown - 29mm *Shim - 5mm shims are allowed to a max. of two shims (10mm total). *Exhaust springs are a NON-Tech item.
15.	Remaining Parts	All parts to be original as supplied by the original manufacturer. No grinding, polishing or modification of **any part** allowed. Following exceptions: 1.Radiator and Mounting Hardware is NON-TECH 2. Water Hoses and Clamps are NON-TECH 3. Data Acquisition Systems and installation of sensors is considered NON-TECH
NON-TECH		The term "NON-TECH" shall mean that the item has no technical specifications. Items that are deemed "NON-TECH" can not be used to disqualify a competitor. These items however must comply with any rules from the governing federation that are applicable.
NOTE		If you are unsure as to whether or not a "non-stock" or modified part can be used, ask the technical representative at the event. If you are unable to get an answer then assume that you can not use it and the part in question must remain as a "stock" part as supplied by the original manufacturer.